MICROWAVE

C22F SERIES

DPDT Relay style DC to 40 GHz family.

The C22F series offers superior performance in DPDT microwave switching utilizing SMA, TNC, BNC, K AND 1.6/5.6 connector styles.

The vast choice of connector styles in this families package size makes this series a solid building block for transfer switching needs DC to 40 GHz.

The following pages comprise a variety of sample models commonly used.

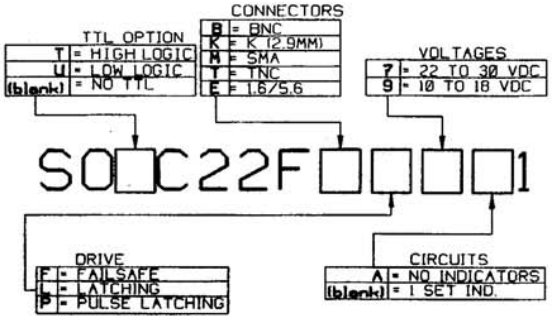

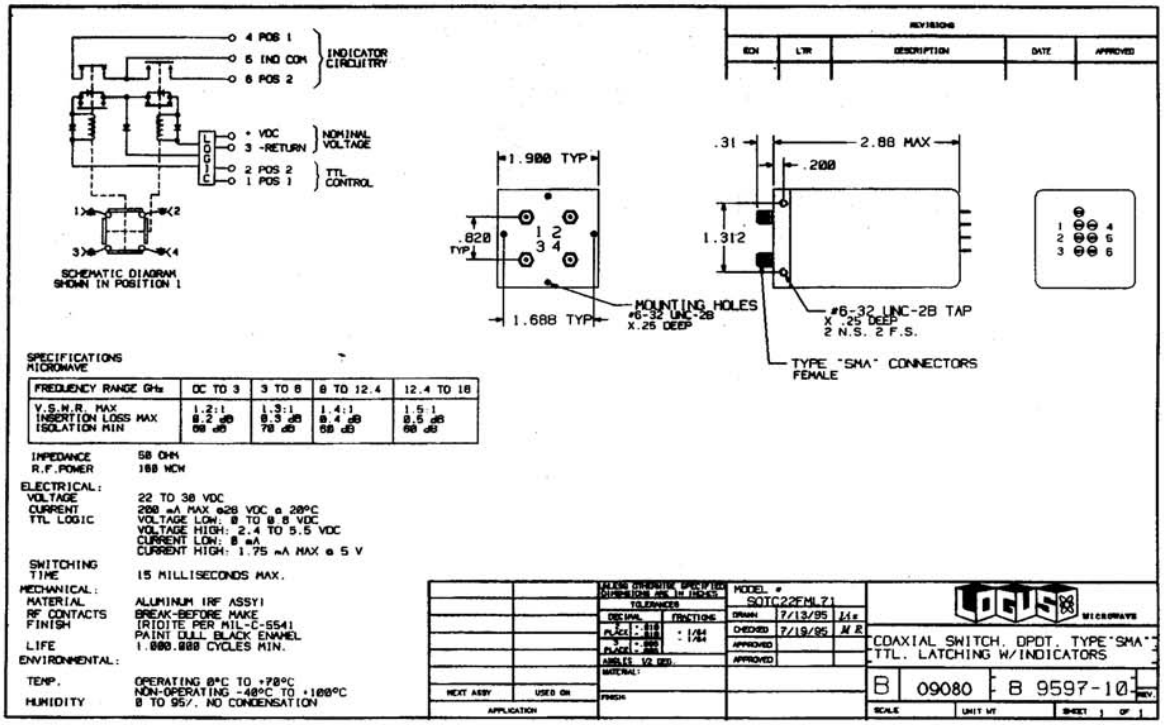

SPECIFICATIONS
MICROWAVE

FREQUENCY RANGE GHz	DC TO 3	3 TO 8	8 TO 12.4	12.4 TO 18
V.S.W.R. MAX	1.2:1	1.3:1	1.4:1	1.5:1
INSERTION LOSS MAX	0.2 dB	0.3 dB	0.4 dB	0.5 dB
ISOLATION MIN	80 dB	70 dB	60 dB	60 dB

IMPEDANCE 50 OHM
R.F.POWER 100 WCW

ELECTRICAL:
VOLTAGE 22 TO 30 VDC
CURRENT 200 mA MAX @28 VDC @ 20°C
TTL LOGIC VOLTAGE LOW: 0 TO 0.8 VDC
VOLTAGE HIGH: 2.4 TO 5.5 VDC
CURRENT LOW: 0 mA
CURRENT HIGH: 1.75 mA MAX @ 5 V

SWITCHING TIME 15 MILLISECONDS MAX.

MECHANICAL:
MATERIAL ALUMINUM IRF ASSY1
RF CONTACTS BREAK-BEFORE MAKE
FINISH IRIDITE PER MIL-C-5541
PAINT DULL BLACK ENAMEL
LIFE 1.000.000 CYCLES MIN.

ENVIRONMENTAL:
TEMP. OPERATING 0°C TO +70°C
NON-OPERATING -40°C TO +100°C
HUMIDITY 0 TO 95%, NO CONDENSATION

SOTC22FML71

REVISIONS				
ECN	LTR	DESCRIPTION	DATE	APPROVED

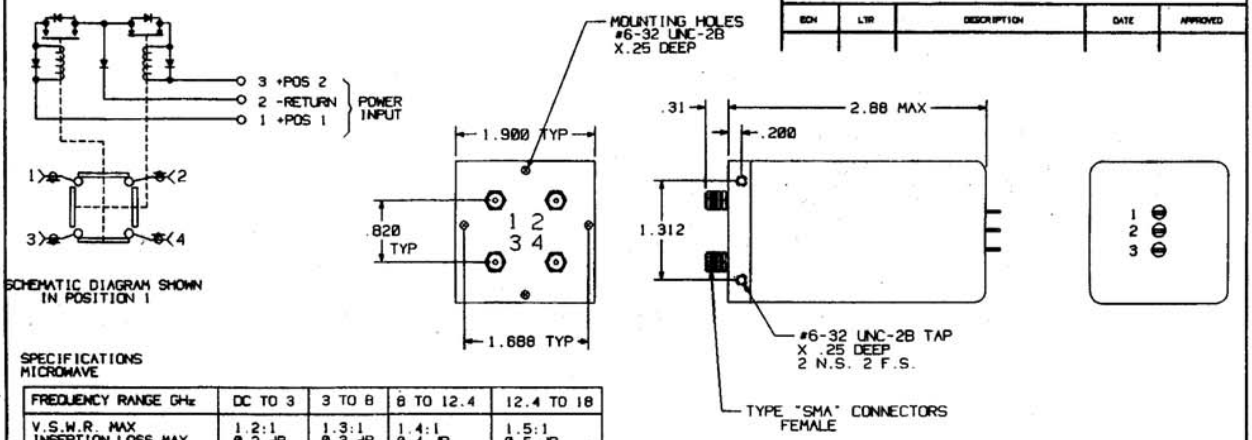

SPECIFICATIONS
MICROWAVE

FREQUENCY RANGE GHz	DC TO 3	3 TO 8	8 TO 12.4	12.4 TO 18
V.S.W.R. MAX	1.2:1	1.3:1	1.4:1	1.5:1
INSERTION LOSS MAX	0.2 dB	0.3 dB	0.4 dB	0.5 dB
ISOLATION MIN	60 dB	70 dB	60 dB	60 dB

IMPEDANCE 50 OHM
R.F.POWER 100 WCW

ELECTRICAL:
VOLTAGE 22 TO 30 VDC
CURRENT 250 mA MAX @28 VDC @ 20°C
SWITCHING TIME 15 MILLISECONDS MAX.

MECHANICAL:
MATERIAL ALUMINUM (RF ASSY)
RF CONTACTS BREAK-BEFORE MAKE
FINISH IRIDITE PER MIL-C-5541
PAINT DULL BLACK ENAMEL
LIFE 1.000.000 CYCLES MIN

ENVIRONMENTAL:
TEMP. OPERATING 0°C TO +70°C
NON-OPERATING -40°C TO +100°C
HUMIDITY 0 TO 95%, NO CONDENSATION

MODEL #	SOC22FML7A1		
DRAWN	7/13/95	Lis	
CHECKED	7/19/95	M E	
APPROVED			
APPROVED			

LOCUS MICROWAVE

COAXIAL SWITCH, DPDT, TYPE "SMA", LATCHING, NO INDICATORS

B 09080 B 9597-9 REV.

SCALE UNIT WT SHEET 1 OF 1

NEXT ASSY USED ON APPLICATION

SOC22FML7A1

REVISIONS				
ECN	LTR	DESCRIPTION	DATE	APPROVED

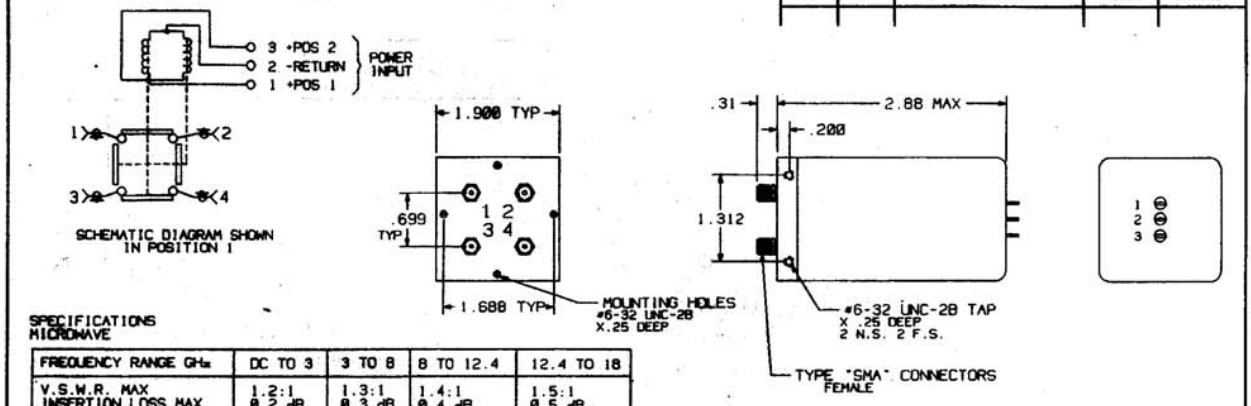

SPECIFICATIONS
MICROWAVE

FREQUENCY RANGE GHz	DC TO 3	3 TO 8	8 TO 12.4	12.4 TO 18
V.S.W.R. MAX	1.2:1	1.3:1	1.4:1	1.5:1
INSERTION LOSS MAX	0.2 dB	0.3 dB	0.4 dB	0.5 dB
ISOLATION MIN	80 dB	70 dB	60 dB	60 dB

IMPEDANCE 50 OHM
R.F.POWER 100 WCW

ELECTRICAL:
VOLTAGE 22 TO 30 VDC
PULSE WIDTH 30 mS MIN; 50 mS MAX
CURRENT 200 mA MAX @28 VDC @ 20°C
SWITCHING TIME 15 MILLISECONDS MAX.

MECHANICAL:
MATERIAL ALUMINUM (RF ASSY)
RF CONTACTS BREAK-BEFORE MAKE
FINISH IRIDITE PER MIL-C-5541
PAINT DULL BLACK ENAMEL
LIFE 1.000.000 CYCLES MIN.

ENVIRONMENTAL:
TEMP. OPERATING 0°C TO +70°C
NON-OPERATING -40°C TO +100°C
HUMIDITY 0 TO 95%, NO CONDENSATION

MODEL #	SOC22FMP7A1		
DRAWN	7/13/95	Lis	
CHECKED	7/19/95	M E	
APPROVED			
APPROVED			

LOCUS MICROWAVE

COAXIAL SWITCH, DPDT, TYPE "SMA", PULSE LATCHING, NO INDICATORS

B 09080 B 9597-12 REV.

SCALE UNIT WT SHEET 1 OF 1

NEXT ASSY USED ON APPLICATION

SOC22FMP7A1

LOGUS MICROWAVE

C22G SERIES

DPDT Relay style DC to 15 GHz family.

The C22G series offers performance and value in DPDT transfer RF switching in N and precision N connector styles.

Covering DC to 15 GHz, this series is a real workhorse in numerous applications including telecommunications and cellular.

The following pages comprise a variety of sample models commonly used.

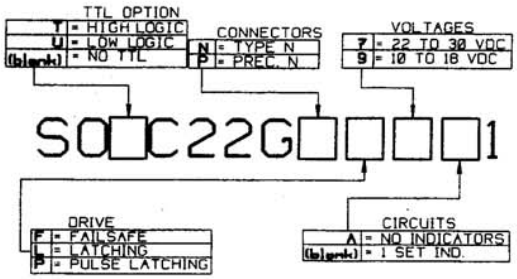

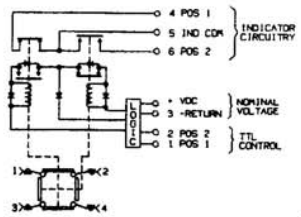

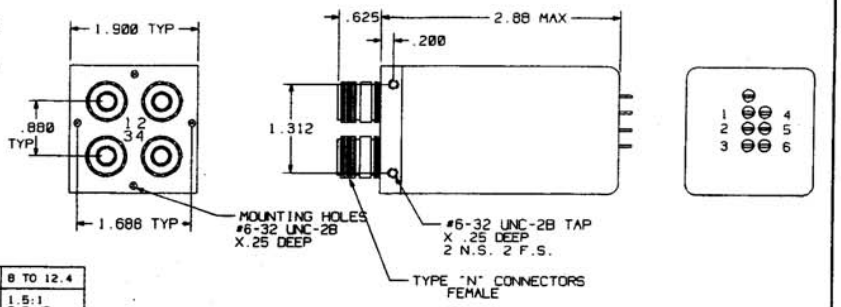

REVISIONS

ECN	LTR	DESCRIPTION	DATE	APPROVED

SPECIFICATIONS
MICROWAVE

FREQUENCY RANGE GHz	DC TO 3	3 TO 8	8 TO 12.4
V.S.W.R. MAX	1.2:1	1.35:1	1.5:1
INSERTION LOSS MAX	0.2 dB	0.35 dB	0.5 dB
ISOLATION MIN	80 dB	70 dB	60 dB

IMPEDANCE 50 OHM
POWER MAX. 100 WATTS
ELECTRICAL:
VOLTAGE 22 TO 30 VDC
PULSE WIDTH 50 Ms MIN
100 Ms MAX
CURRENT 200 mA MAX @28 VDC @ 20°C
TTL LOGIC VOLTAGE LOW: 0 TO 0.8 VDC
VOLTAGE HIGH: 2.4 TO 5.5 VDC
CURRENT LOW: 0 mA
CURRENT HIGH: 1.75 mA MAX @ 5 V
SWITCHING TIME 20 MILLISECONDS MAX.
MECHANICAL:
MATERIAL ALUMINUM (RF ASSY)
RF CONTACTS BREAK-BEFORE MAKE
FINISH IRIDITE PER MIL-C-5541
PAINT DULL BLACK ENAMEL
LIFE 1,000,000 CYCLES MIN.
ENVIRONMENTAL:
TEMP. OPERATING 0°C TO +70°C
NON-OPERATING -40°C TO +100°C
HUMIDITY 0 TO 95%, NO CONDENSATION

UNLESS OTHERWISE SPECIFIED DIMENSIONS ARE IN INCHES
TOLERANCES
DECIMAL PLACE .X ±.010 .XX ±.005 .XXX ±.002
FRACTIONS ±1/64
ANGLES ±1/2 DEG
MATERIAL
FINISH
NEXT ASSY | USED ON
APPLICATION

MODEL # SOTC22GNL71
DRAWN 7/14/95 L.S.
CHECKED 7/19/95 M.E.
APPROVED
APPROVED

LOGUS MICROWAVE
COAXIAL SWITCH, DPDT, TYPE "N", LATCHING, TTL, W/INDICATORS

B 09080 B 9599-9 REV
SCALE UNIT WT SHEET 1 OF 1

SOTC22GNL71